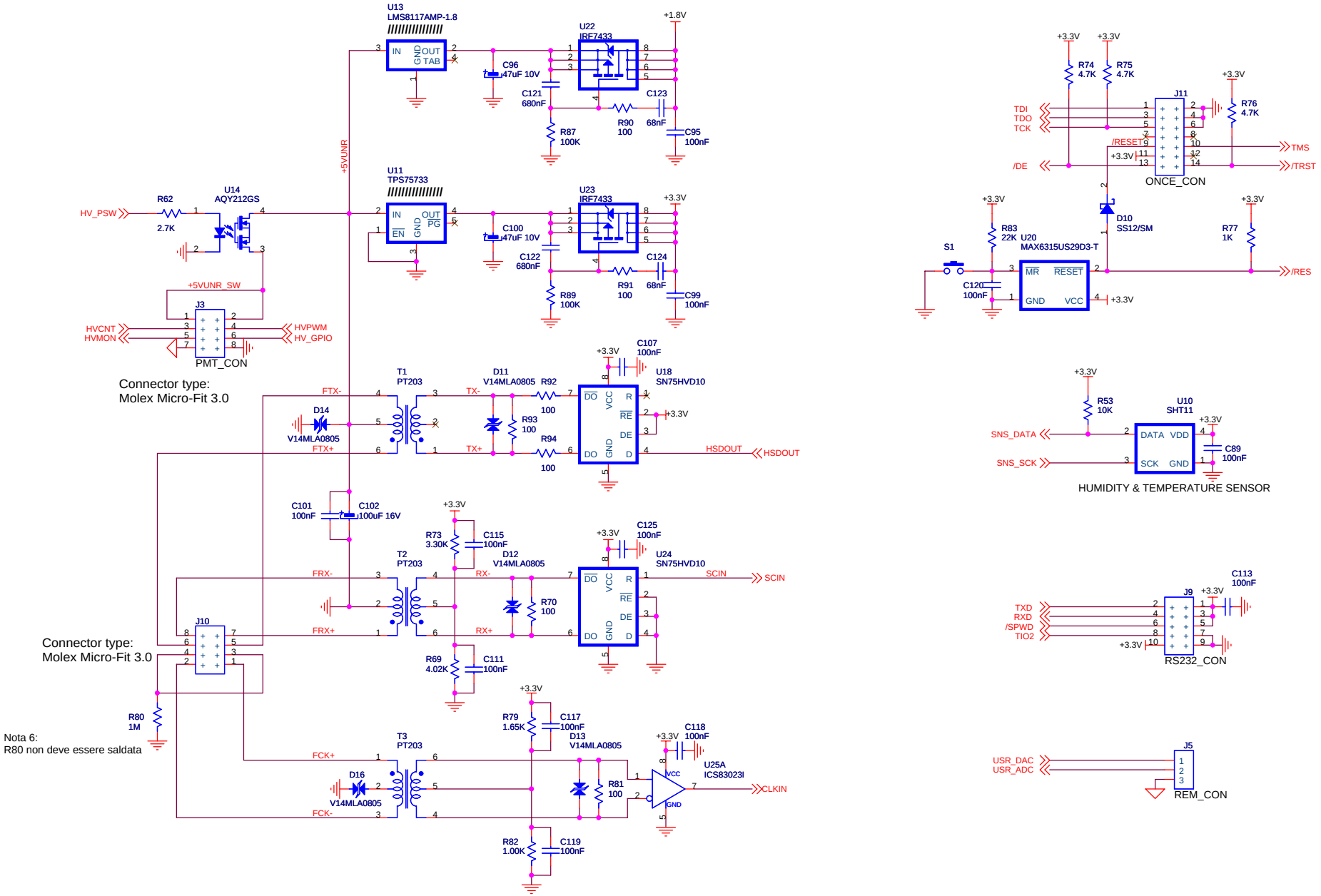

I.N.F.N. Sez. di Roma
P.le Aldo Moro, 5
00185 ROMA ITALIA

Pmt Electronics: Power & Interface

Size	CAGE Code	DWG NO	Rev
A3	<Cage Code>	<Doc>	02

Scale

Sheet 3 of 3

Tuesday, April 26, 2005